SANTEC
FLUID IMAGINATION

Rev. 5/16
DESIGNER SERIES
Modena II

PRODUCT SPECIFICATION SHEET

ITEM # 7093TX-TM
TRIM
3/4" Thermostatic control

- "TX" style handle
- Includes trim plate and handle
- Requires separate volume control
- VALVE NOT INCLUDED
- USE TH-5034 VALVE

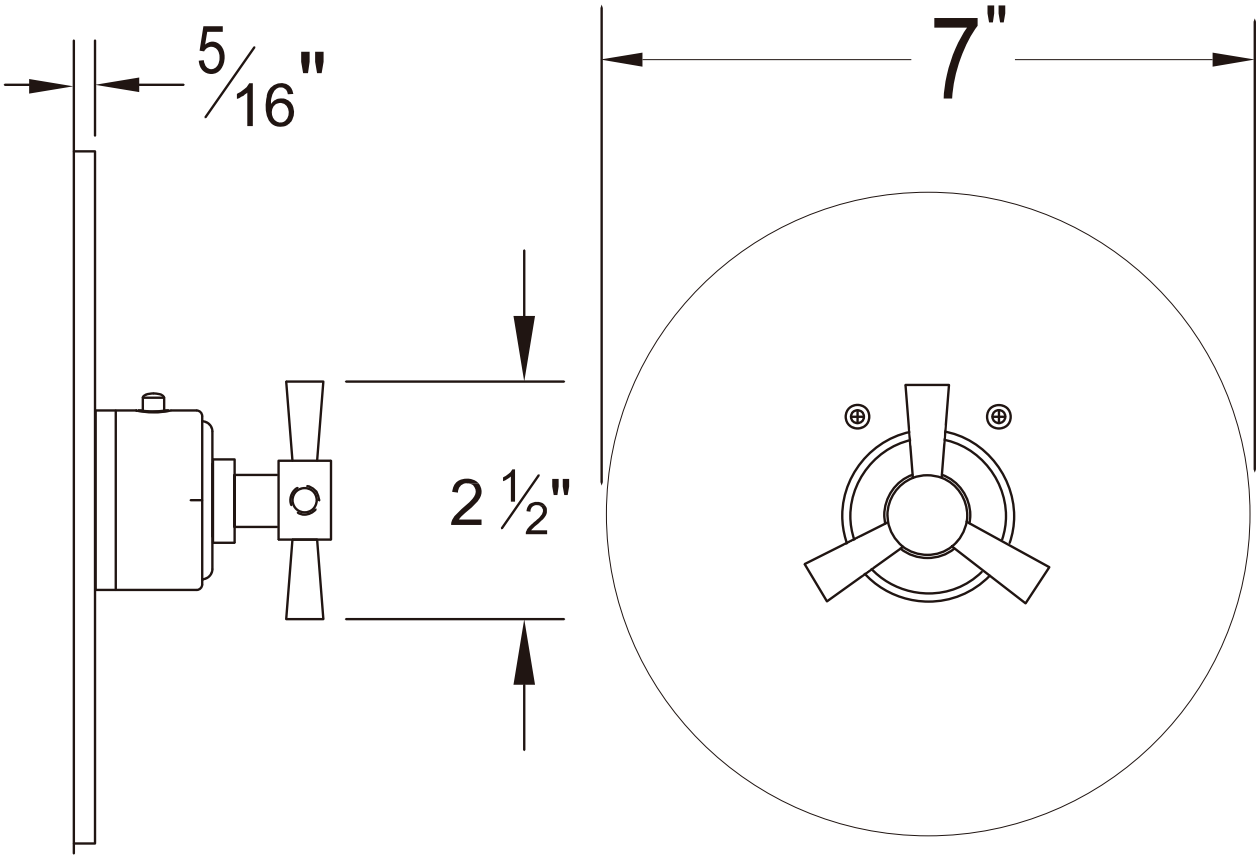

The measurements shown are for reference only. Products and specifications shown are subject to change without notice.

www.santecfaucet.com | P: 310.542.0063 F: 310.542.5681