hansgrohe

Logis
Widespread Faucet 150 with Pop-Up Drain, 1.2 GPM
Finish: **matte black** Part no. : **71533671**

Description

Features

- Handle variant: Lever
- Spray modes: aerated spray
- Flow: 1.2 GPM (4.5 L/Min)
- Ceramic valves hot/cold 90°
- Includes pop-up drain

Item details

List Price	$ 490.00

Technology

EcoRight

Comfort Zone

Compliance / Sustainability

ADA

WaterSense Meets EPA Criteria Certified by IAPMO R&T

UPC C ®

Product image
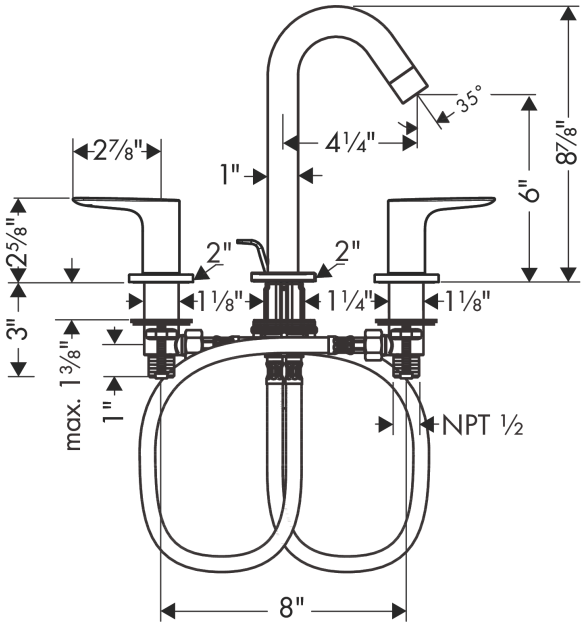
Scale drawing