INSTALLATION INSTRUCTIONS

FFT2602CH
Extended single-lever faucet

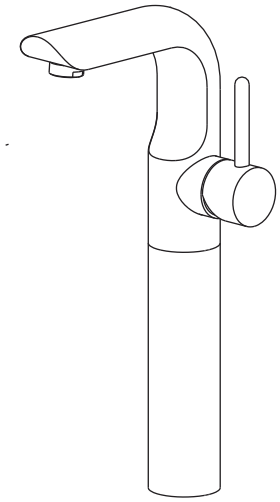

Important

We recommend that this product is installed by a qualified professional contractor.

- Please check this product immediately to ensure that it has not been damaged and is complete.
- Please flush the water system to ensure that no debris or any other impurities can enter the taps.
- Turn off water supply before commencing work.
- Please read these instructions carefully and keep for future reference.

Cleaning

Before use: Unscrew the Aerator and allow the water to run freely for 5 minutes. Then screw the filter back in place.

Periodically: Unscrew the Aerator and remove. Rinse it with running water until any loose debris is cleared. Then replace the Aerator and tighten.

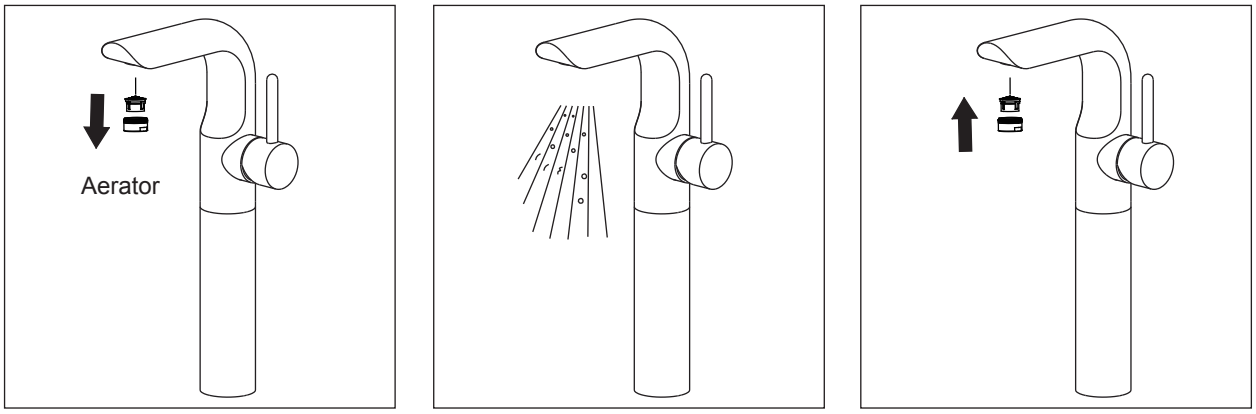

Maintainance

We do NOT recommend you use any household cleaners to clean the product. Because these cleaners change substance or formula too frequently. The product should always be cleaned only with soapy water and rinsed with clean water and dried with a soft cloth.

Dimensions

Unit:inches

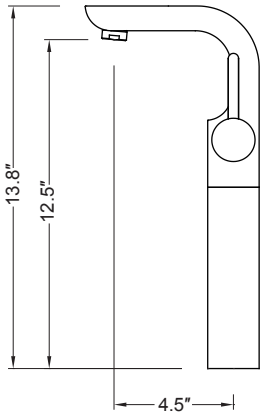

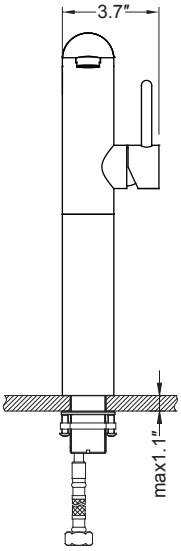

Installation

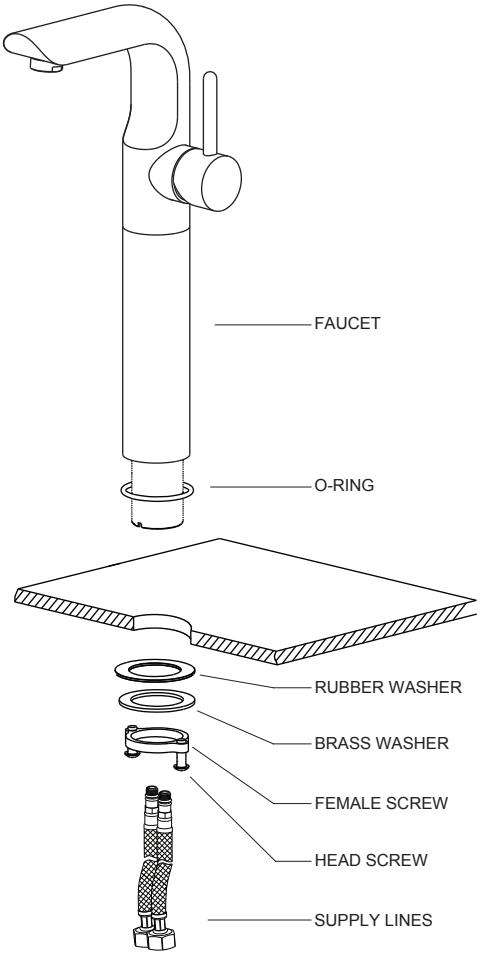

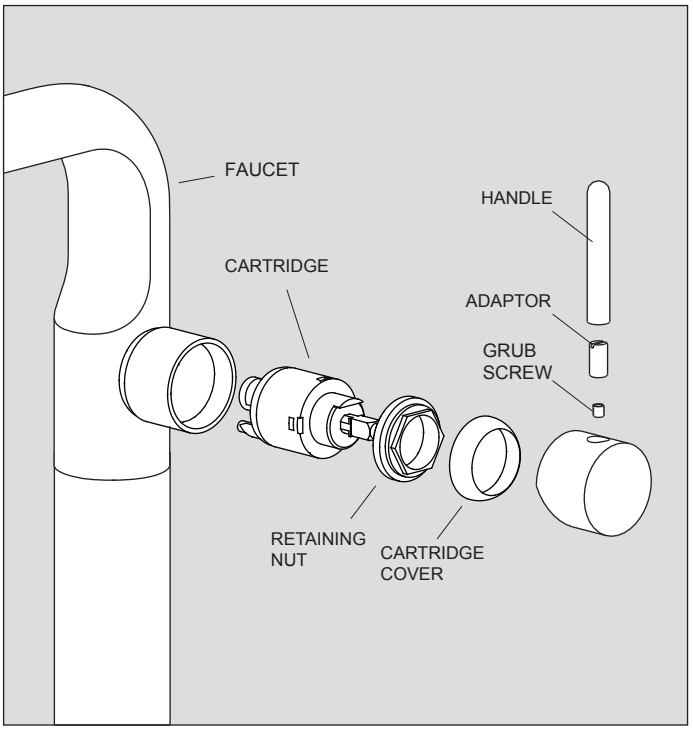

To remove the cartridge.

⚠ **First shut off the water supply to the tap.**

1: Pull out the cap from the handle.
2: Loosen the grub screw in handle, but do not remove it.
3: Take off the handle, unscrew the cartridge cover.
4: Unscrew the retaining nut.
5: Pull the cartridge and wash it with clean running water.
6: Dry and lightly grease the seals (only use silicone grease)

1: Fit the O-ring in the underside of the faucet.
2: Screw the supply lines into the faucet and fully hand tighten.
3: Pass the tail of supply lines through the hole on the basin from above, and place the faucet in position on the basin, to see if any alteration to the existing supply pipe work is necessary, make any necessary alterations to the pipe work.
4: Tighten the rubber washer, the brass washer with the female screw from the underside of the counter.
5: Check that the faucet is correctly positioned, fully tighten the female screw.
6: Connect the water supply pipes to the tail of supply lines with the hot water and cold water.

This faucet meets or exceeds the following standards:
ASME A112.18.1/CSA B125.1/NSF61-9
This product has been tested and certified by IAPMO.

IAPMO LISTED