Authentic Soap Dispenser

MODEL # 40537

Pure Freude an Wasser

GROHE America, Inc | 200 North Gary Avenue, Suite G, Roselle, IL 60172
Phone: +1 (800) 444-7643 | Fax: +1 (800) 225-2778 | us-customerservice@grohe.com

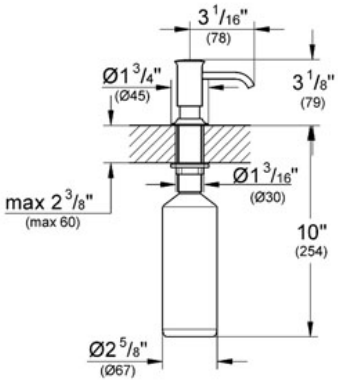

Product Description:
Authentic Soap Dispenser

Standard Specification:
- GROHE Starlight® finish
- For liquid soaps
- Storage bin 0.1g

Applicable Codes & Standards:
- Energy Policy Act of 1992
- ASME A112.18.1/CSA B125.1

Color:
❑ 40537 000 chrome
❑ 40537 EN0 Brushed Nickel
❑ 40537 ZB0 Oil Rubbed Bronze