TALIA
Concealed Valve Exposed Part
MODEL # 19262

Pure Freude an Wasser

GROHE

GROHE America, Inc | 200 North Gary Avenue, Suite G, Roselle, IL 60172
Phone: +1 (800) 444-7643 | Fax: +1 (800) 225-2778 | us-customerservice@grohe.com

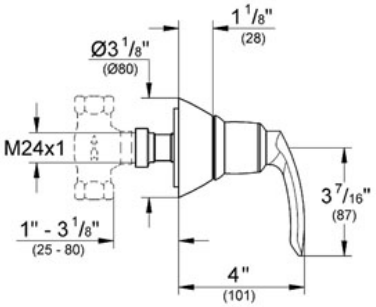

UPC C ®

ADA

Product Description:
Concealed Valve Exposed Part

Standard Specification:
- **GROHE StarLight®** finish
- For GROHE concealed valves 1/2", 3/4", 1"
- Adjustable installation depth
- 3/4" - 3 1/8"
- With Talia Volo lever handle

Applicable Codes & Standards:
- Energy Policy Act of 1992
- ASME A112.18.1/CSA B125.1
- ICC/ANSI A117.1

Color:
- ❑ 19262 000 chrome
- ❑ 19262 EN0 Brushed Nickel