KITCHEN
SYSTEMS

FRANKE

SPECIFICATION SHEET

PRODUCT FAMILY : **Point of Use and Filtration** FINISH : **Satin Nickel** SERIES : **HOT AND FILTERED COLD WATER DISPENSER**
MODEL : **LB7270**

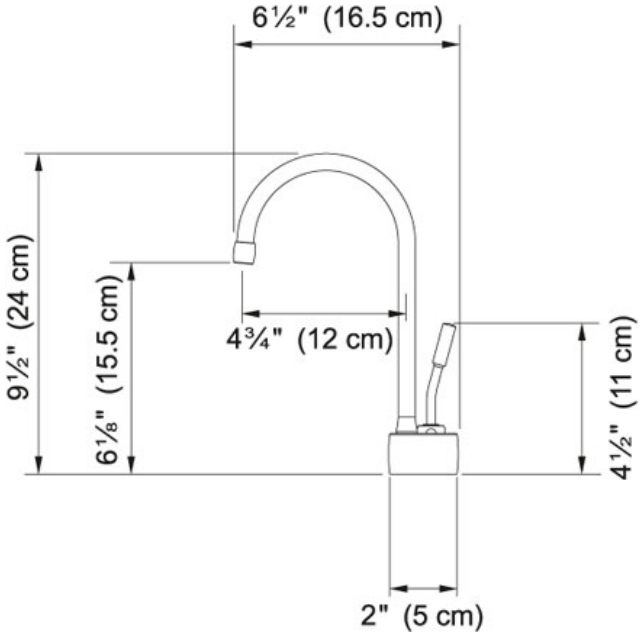

Product Information

FUN#	120.0296.743
US Part Number	LB7270
	Hot & Filtered Cold Water Dispenser