KITCHEN
SYSTEMS

FRANKE

SPECIFICATION SHEET

PRODUCT FAMILY : **Sinks** FINISH : **Stainless Steel** SERIES : **NOBEL** MODEL : **NAX110**

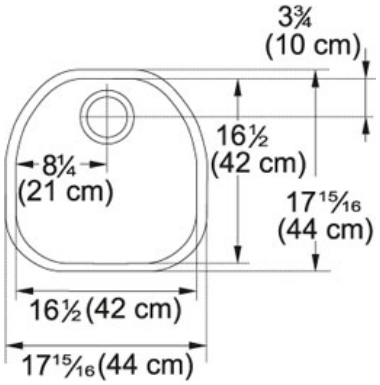

Product Information

FUN#	122.0035.125
US Part Number	NAX110
Minimum Cabinet Size	21"
Drain Opening	3 1/2"
Outer Dimensions	17 1/2"x17 3/16"
Bowl Size	16 1/2"x16 1/2"x7 1/8"
Type of Material	20 ga Stainless Steel

Accessories

112.0035.639

112.0037.070

112.0038.356

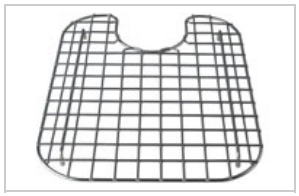

112.0066.252

112.0066.282

Suggested Products

112.0006.145

112.0007.729

112.0049.213

112.0066.071

112.0073.921

112.0073.934

115.0067.259

119.0066.616

119.0068.282

120.0175.331

133.0178.205