KITCHEN
SYSTEMS

FRANKE

SPECIFICATION SHEET

PRODUCT FAMILY : **Sinks** FINISH : **Stainless Steel** SERIES : **LARGO** MODEL : **LAX12034**

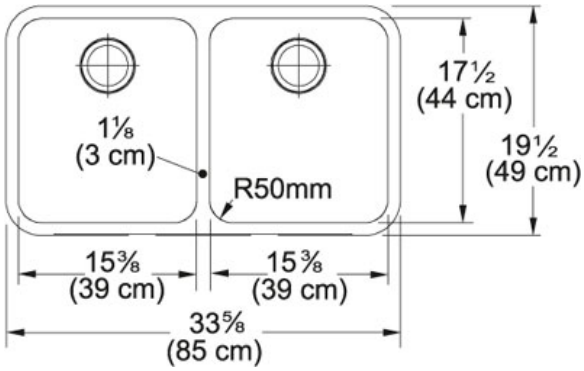

Product Information

FUN#	122.0070.668
US Part Number	LAX12034
Minimum Cabinet Size	36"
Drain Opening	3 1/2"
Outer Dimensions	33 5/8"x19 1/2"
Bowl Size	15 3/8"x17 1/2"x9 1/16"
Number of Bowls	2
Type of Material	18 ga Stainless Steel

KITCHEN
SYSTEMS

Accessories

112.0039.150

Suggested Products

112.0007.728

112.0049.213

112.0066.071

112.0073.921

112.0073.934

119.0066.616

119.0068.282

120.0175.318

133.0178.205