PROJECT: _____

FIXTURE TYPE: _____

LOCATION: _____

CONTACT/PHONE: _____

Model #	83261
Collection	fornello™
Finish	Brushed Nickel
Shade/ Diffuser	- - -
FIXTURE: Length/Dia. Width/Ext. Height	23.5" [60cm] - - - 2.75" [7cm]
Maximum Hanging Height	54" [137.2cm]
Light Source/ Bulb Info.	LED Tape 380 x .1W = 38W Total
Included?	Integrated
Driver/ Transformer	Dimmable, Class 2 Driver
Input	AC 100-110V, 50/60 Hz .5A
Dimmable	Yes
Color	3800K
Lumens	1220
Notes:	

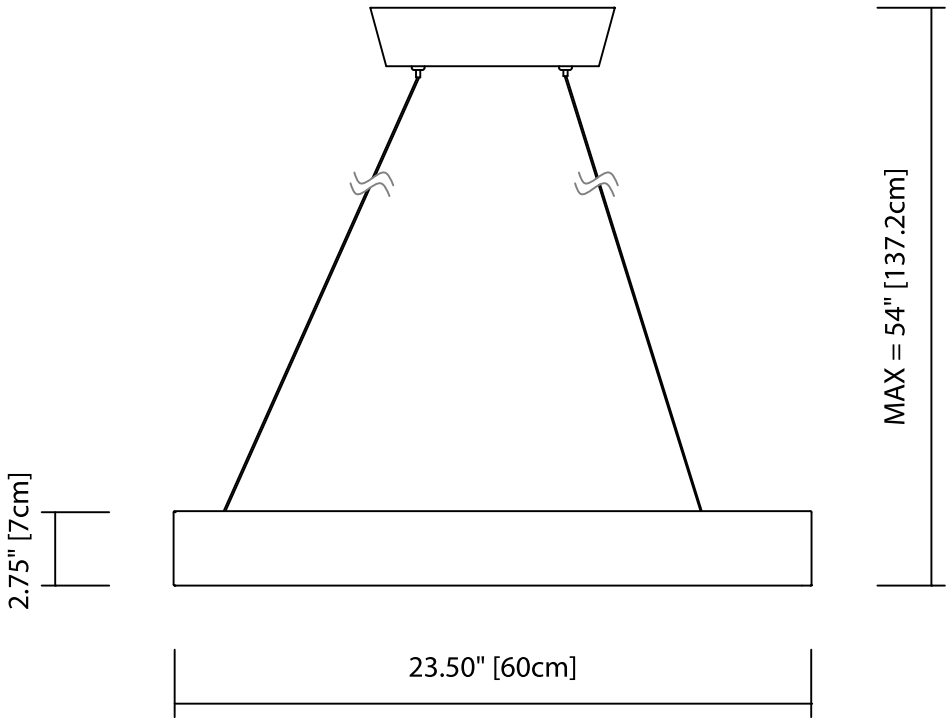

Intertek

A KICHLER COMPANY

www.elan-lighting.com