Kitchen Bridge Faucet 8VRBRVL

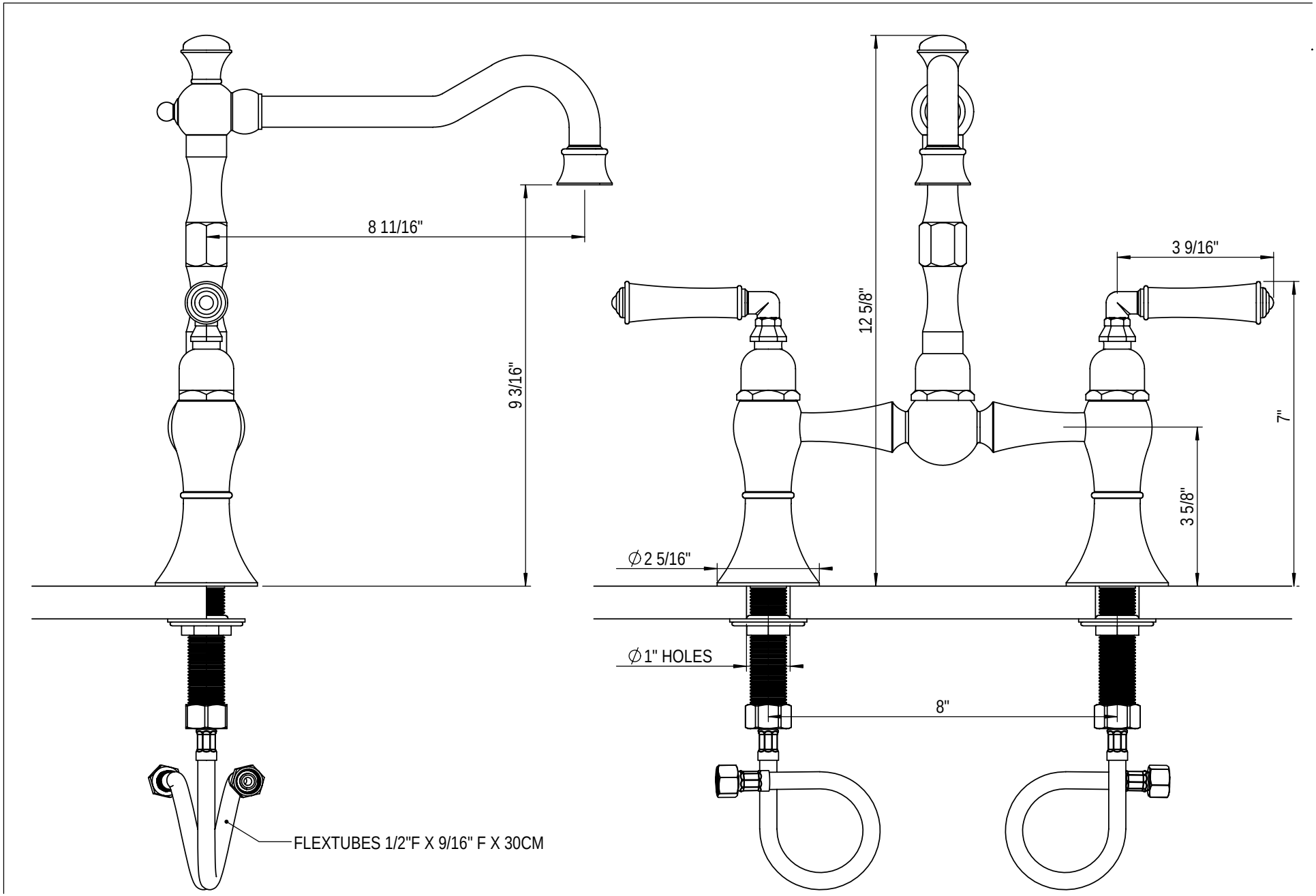

TEL: 905-851-6781
FAX: 905-851-8031
TOLL FREE: 800-461-5901

THE **Rubinet** FAUCET COMPANY

www.rubinet.com