Specifications

Features

- *Brass construction with choice of 18 finishes*
- *Single Control Lever handle: Plain or with optional Black or Clear Swarovski* Crystal inlay*
- *One-Piece, ceramic disc cartridge allows both volume and temperature control*
- *Flexible Stainless Steel supply hoses for easy installation*
- *2.2 gpm @ 60 psi (Spout mode); 1.2 gpm @ 60 psi (Spray mode)*

Order Matrix

Model	Main Finish	Accent Finish
8IRBICL	AB - Antique Brass	00 - No inlays
	AC - Antique Copper	CL - Clear crystal inlays
	BB - Bright Brass	JT - Black crystal inlays
	CH - Chrome	
	GD - Gold	
	OB - Oil Rubbied Bronze	
	PN - Polished Nickel	
	SB - Satin Brass	
	SC - Satin Chrome	
	SN - Satin Nickel	
	TB - Tuscan Brass	
	AQ - Aqua	
	BK - Black	
	MB - Matt Black	
	MW - Matt White	
	NC - Natural Cream	
	RD - Red	
	WH - White	

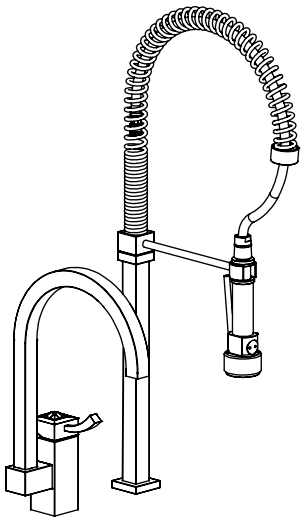

ICE

Single Control Kitchen Set with Suspended Indusrial Spray
Model: 8IRBICL-XX-XX

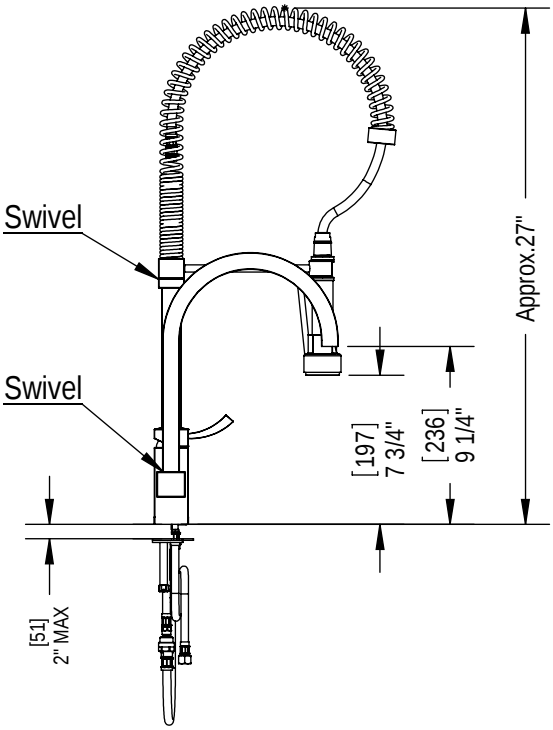

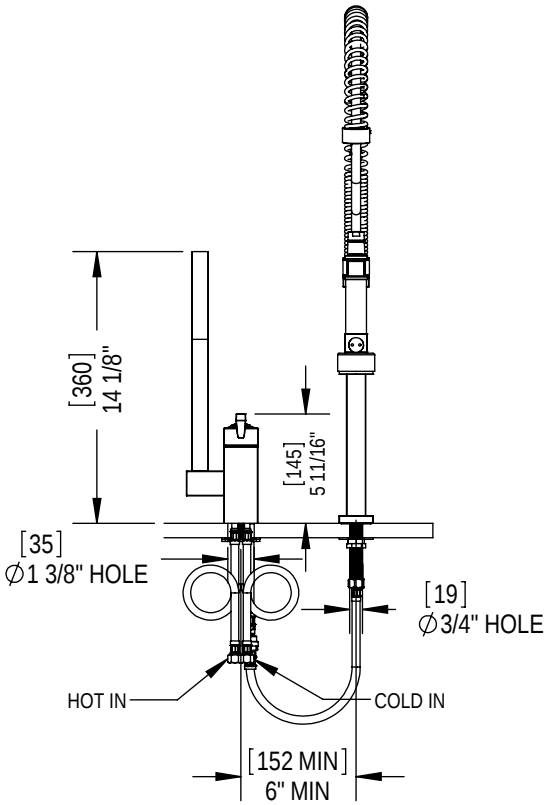

Critical Dimensions

TEL: 905-851-6781
FAX: 905-851-8031
TOLL FREE: 800-461-5901