PROJECT: _____

FIXTURE TYPE: _____

LOCATION: _____

CONTACT/PHONE: _____

Model #	83416
Collection	crushed ice™
Finish	Chrome
Shade/ Diffuser	Clear Glass with Crystal Gems and Hanging Crystal Accents
FIXTURE: Length/Dia. Width/Ext. Height	19.75" [50cm] - - - 9" [23cm]
Maximum Hanging Height	- - -
Light Source/ Bulb Info.	LED Tape .2W x 144 = 28.8W Total
Included?	Integrated
Driver/ Transformer	Electronic Class 2 Driver, Dimmable
Input	110-130VAC, 50/60 Hz, .5A
Dimmable	Yes
Color	3800K
Lumens	1264
Notes:	

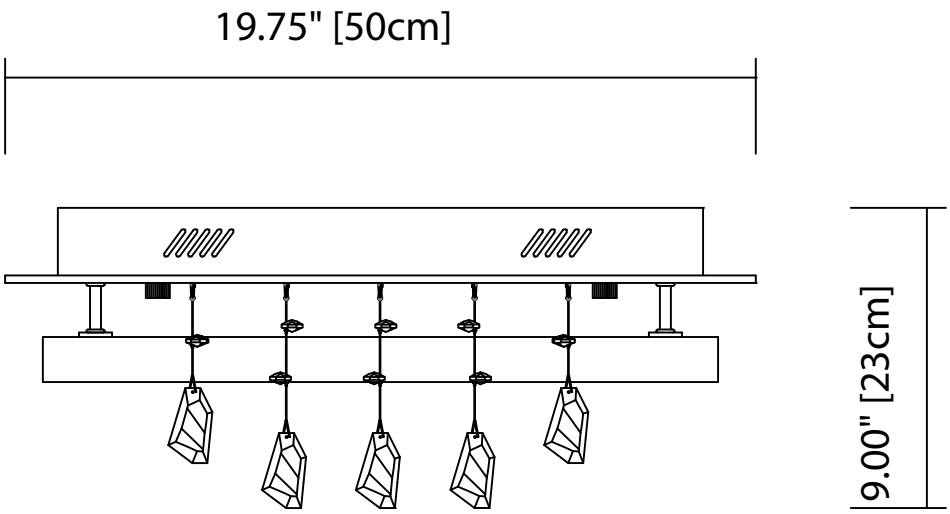

Intertek

A KICHLER COMPANY

www.elan-lighting.com