FAIRMONT designs

Bowtie

www.fairmontdesigns.com

102-V3621R
36” Vanity

SPECIFICATION SHEET

Features

Materials: Poplar solids with Hardwood veneers
Hinges: Fully concealed, soft closing
Doors: 2
Hardware: Brushed Nickel
Drawers: 2
Drawer Box: 1/2” solid pine, four sided English dovetail
Glides: soft closing

Colors / Finish

102-Polar White

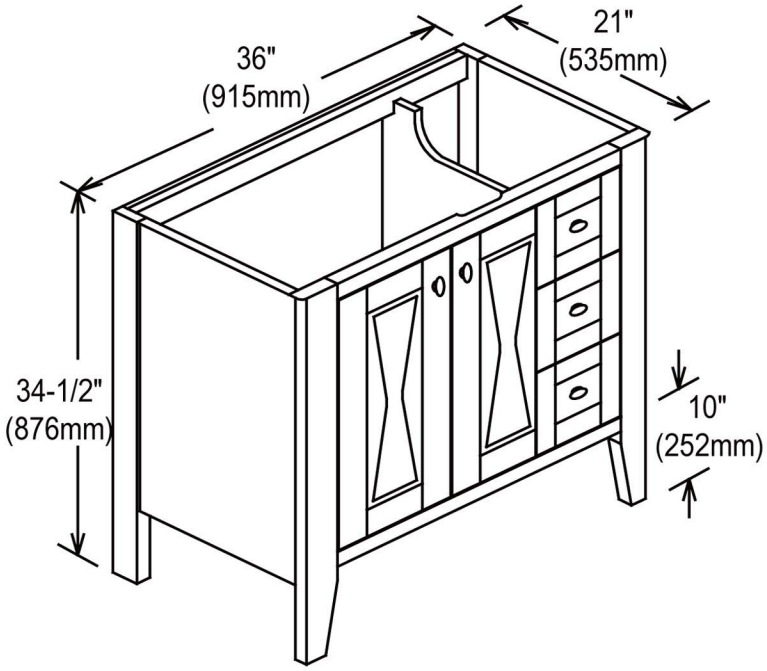

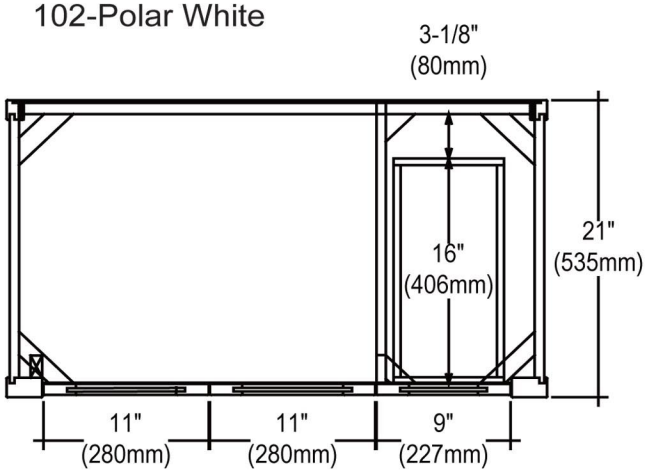

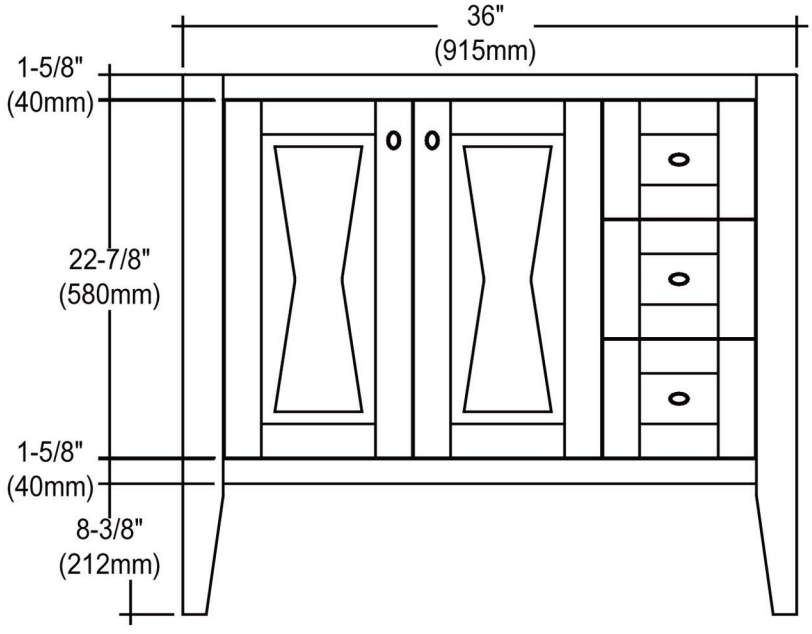

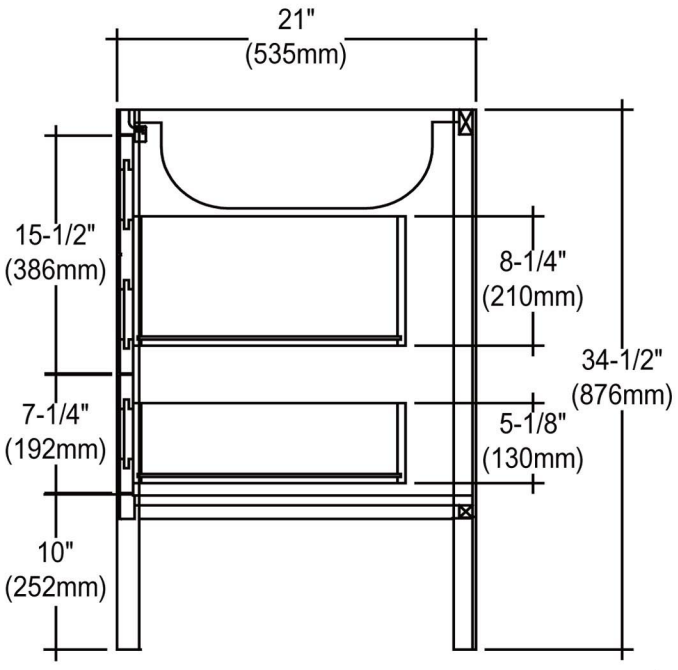

Furnishing Imagination

p 714 670 1171 f 714 736 0300