AXOR Urquiola
Axor Urquiola 2-Handle Single-Hole Faucet
Finishes : **chrome** Part no. : **11024001**

Description

Features

- Aerated spray
- Flow: 1.2 GPM
- 90° ceramic valves
- Includes pop-up assembly

Item details

List Price $ 880.00

Technology

Eco Right · Quick Clean · Comfort Zone

Compliance

UPC · WaterSense Meets EPA Criteria · MAP

Product image

Scale drawing

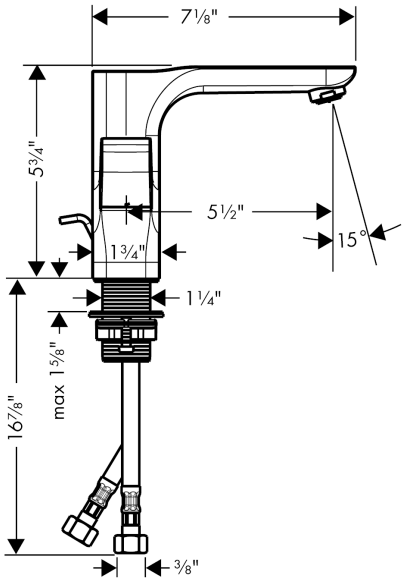

AXOR Urquiola
Axor Urquiola 2-Handle Single-Hole Faucet
Finishes : **chrome** Part no. : **11024001**

Exploded drawing

Year of production: **>07/16**

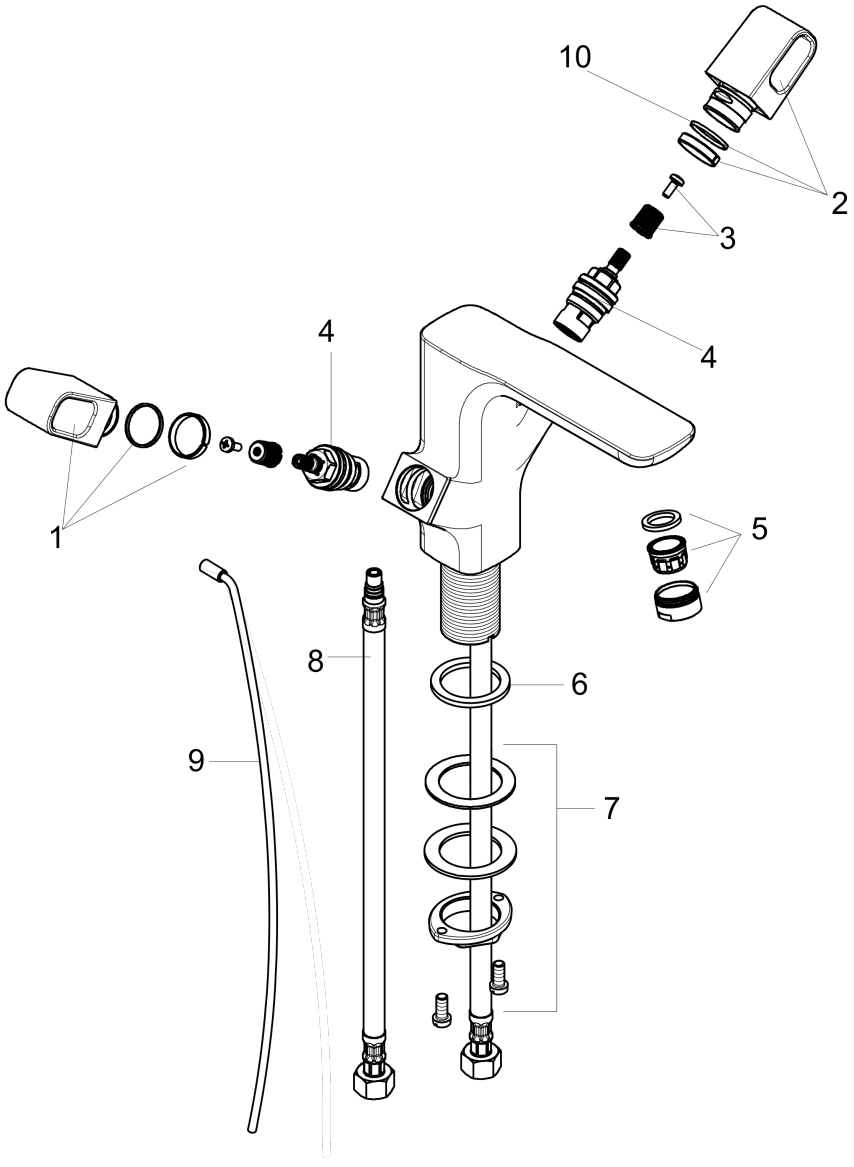

AXOR Urquiola
Axor Urquiola 2-Handle Single-Hole Faucet
Finishes : **chrome** Part no. : **11024001**

Spare parts list

Year of production: **>07/16**

Pos.	Description	Part no.	Price	PU
1	handle for hot water	95608000	-	1
2	handle for cold water	95609000	-	1
3	handle fixing set	98932000	-	1
4	shut off unit right closing	94009001	-	1
5	aerator M24x1 (4,5 l/min)	92877000	-	1
6	flat seal	98749000	-	1
7	fixing set (Ø 32)	13961000	-	1
8	connection hose 18½" M8x0,75 3/8"	96321001	-	1
9	pull rod	96657000	-	1
10	O-ring 20x1,5	98197000	-	1