Ecostat
S Thermostatic Trim with Volume Control and Diverter
Finishes : **chrome** Part no. : **04231000**

Description

Features

- Volume control and diverter for 2 outlets
- Thermostatic cartridge
- Shut-off/diverter valve
- Anti-scald 100° safety stop
- Flow: 7 GPM

Required accessories

- iBox Universal Plus Rough with Service Stops, ¾" (#01850USA)

Optional accessories

- Shallow Extension Set, Thermostatic/Pressure Balance Trim, ⅞" (#13596XXX)

Item details

List Price	$ 550.00

Compliance

ADA UPC C ® MAP

Product image

Scale drawing

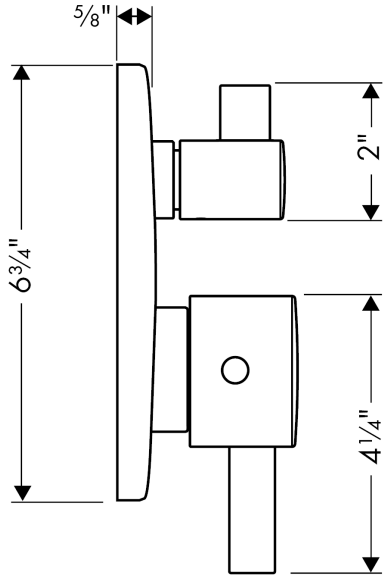

Ecostat
S Thermostatic Trim with Volume Control and Diverter
Finishes : **chrome** Part no. : **04231000**

Exploded drawing

Year of production: **>12/09**

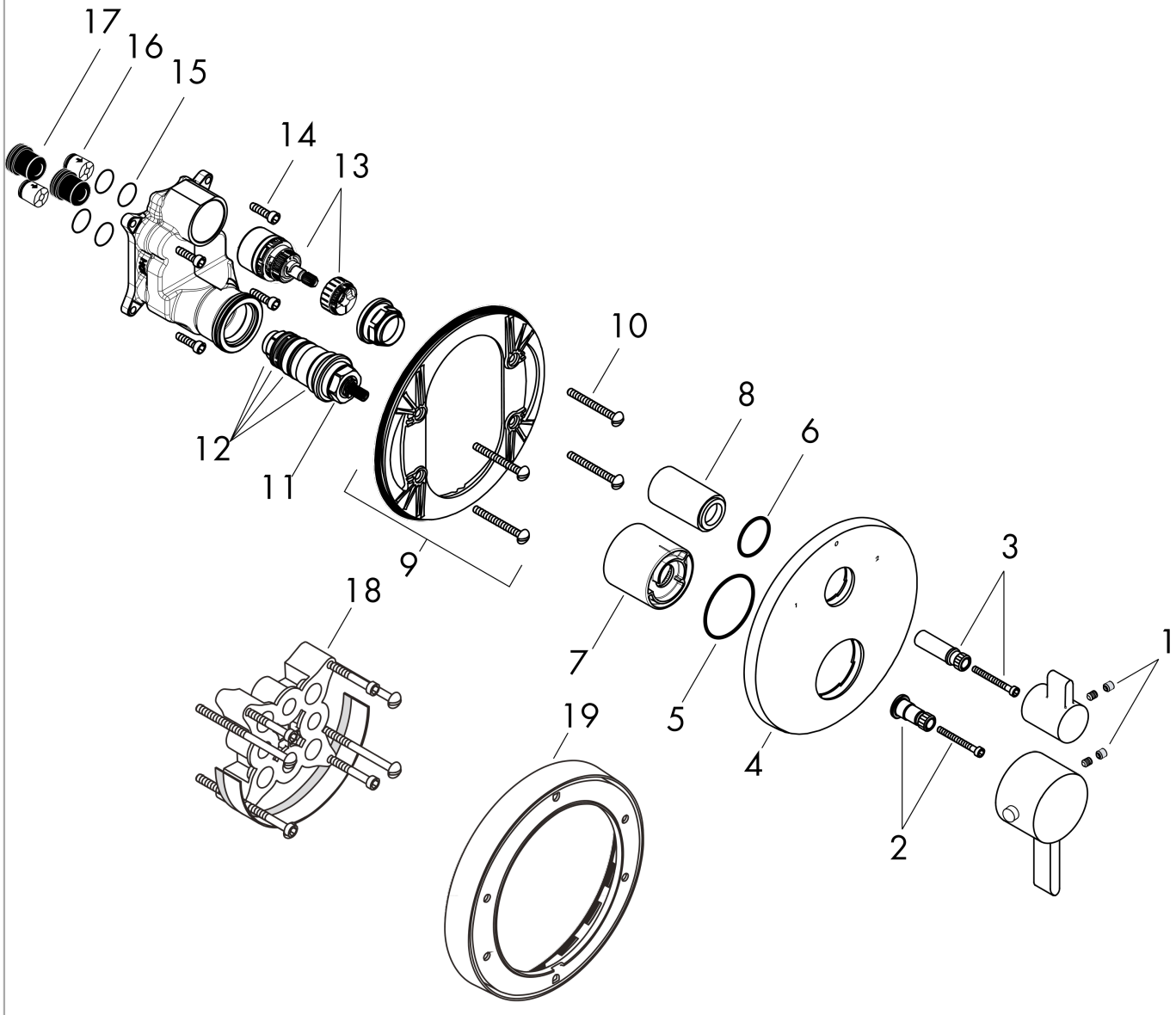

Ecostat
S Thermostatic Trim with Volume Control and Diverter
Finishes : **chrome** Part no. : **04231000**

Spare parts list

Year of production: **>12/09**

Pos.	Description	Part no.	Price	PU
1	screw cover	95181000	-	1
2	adapter for handle	96435000	-	1
3	adapter for handle	88772000	-	1
4	escutcheon Ø 170 mm	96552001	-	1
5	O-Ring 48x3	95508000	-	1
6	O-ring 29x3	98371000	-	1
7	sleeve	95550000	-	1
8	sleeve	95253000	-	1
9	sub plate	96447000	-	1
10	set of fixing screws	96454000	-	1
11	thermostat cartridge	94282000	-	1
12	sealing set	95037000	-	1
13	shut off unit with selector	98283000	-	1
14	set of screws	96525000	-	1
15	O-ring 16x2	98133000	-	1
16	set of non return valves DW 15	97350000	-	1
17	noise reduction	94073000	-	1
18	extension 25 mm	13595000	-	1
19	extension 22 mm (Ø 170 mm)	13596000	-	1

Ecostat
S Thermostatic Trim with Volume Control and Diverter
Finishes : **brushed nickel** Part no. : **04231820**

Description

Features

- Volume control and diverter for 2 outlets
- Thermostatic cartridge
- Shut-off/diverter valve
- Anti-scald 100° safety stop
- Flow: 7 GPM

Required accessories

- iBox Universal Plus Rough with Service Stops, ¾" (#01850USA)

Optional accessories

- Shallow Extension Set, Thermostatic/Pressure Balance Trim, ⅞" (#13596XXX)

Item details

List Price	$ 750.00

Compliance

ADA UPC C ® MAP

Product image

Scale drawing

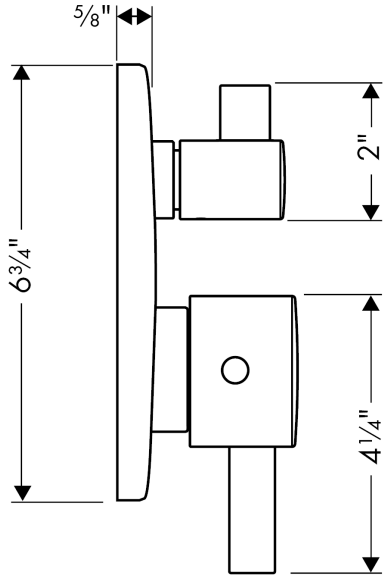

Ecostat
S Thermostatic Trim with Volume Control and Diverter
Finishes : **brushed nickel** Part no. : **04231820**

Exploded drawing

Year of production: **>12/09**

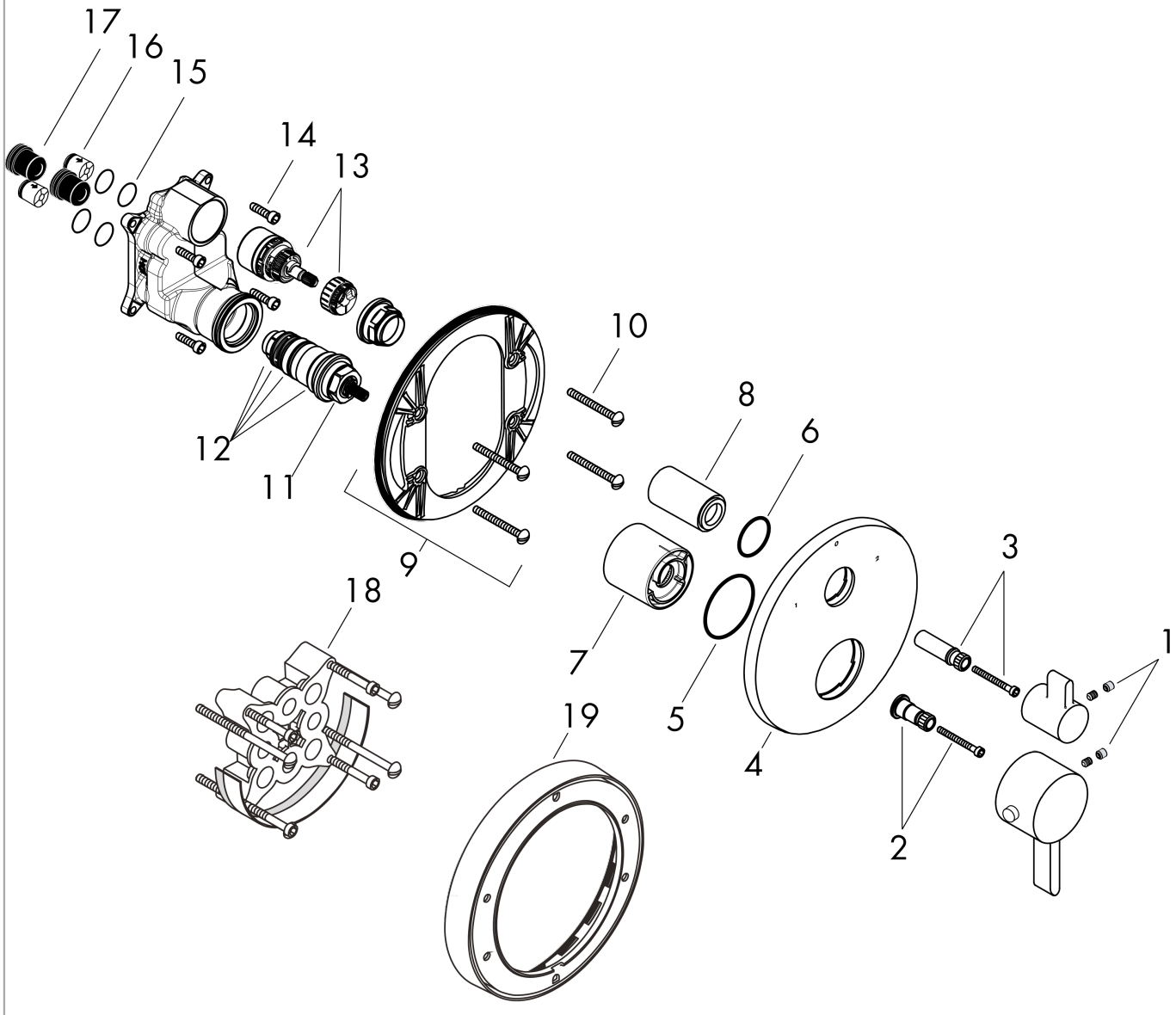

Ecostat
S Thermostatic Trim with Volume Control and Diverter
Finishes : **brushed nickel** Part no. : **04231820**

Spare parts list

Year of production: **>12/09**

Pos.	Description	Part no.	Price	PU
1	screw cover	95181000	-	1
2	adapter for handle	96435000	-	1
3	adapter for handle	88772000	-	1
4	escutcheon Ø 170 mm	96552001	-	1
5	O-Ring 48x3	95508000	-	1
6	O-ring 29x3	98371000	-	1
7	sleeve	95550820	-	1
8	sleeve	95253820	-	1
9	sub plate	96447000	-	1
10	set of fixing screws	96454000	-	1
11	thermostat cartridge	94282000	-	1
12	sealing set	95037000	-	1
13	shut off unit with selector	98283000	-	1
14	set of screws	96525000	-	1
15	O-ring 16x2	98133000	-	1
16	set of non return valves DW 15	97350000	-	1
17	noise reduction	94073000	-	1
18	extension 25 mm	13595000	-	1
19	extension 22 mm (Ø 170 mm)	13596000	-	1